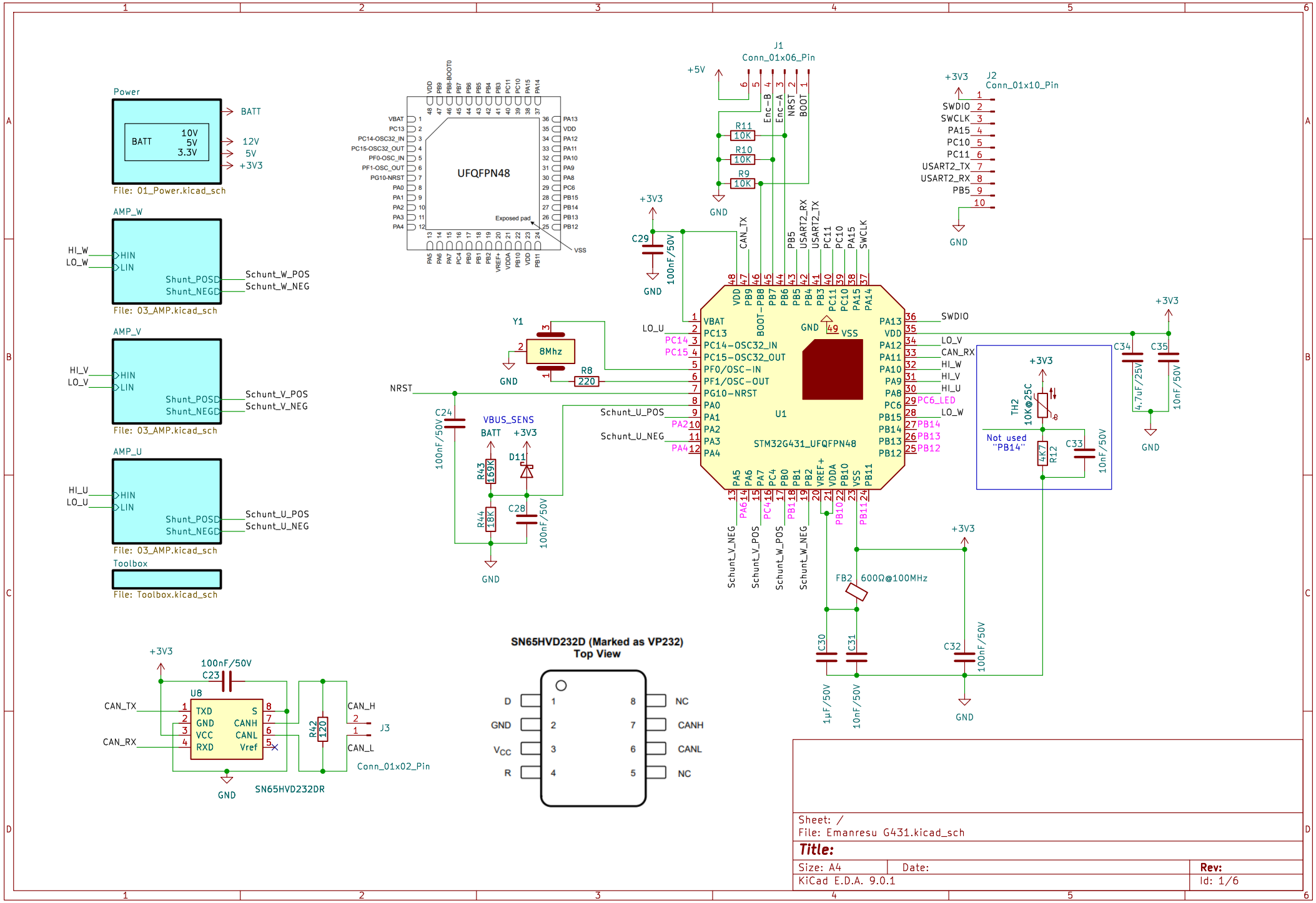
Power
BATT
10V
5V
3.3V
12V
5V
+3V3
File: 01_Power.kicad_sch
AMP_W
HI_W
LO_W
HIN
LIN
Shunt_POSD
Shunt_NEGD
Schunt_W_POS
Schunt_W_NEG
File: 03_AMP.kicad_sch
AMP_V
HI_V
LO_V
Schunt_V_POS
Schunt_V_NEG
File: 03_AMP.kicad_sch
AMP_U
HI_U
LO_U
Schunt_U_POS
Schunt_U_NEG
File: 03_AMP.kicad_sch
Toolbox
File: Toolbox.kicad_sch
UFQFPN48
Exposed pad
VSS
J1
Conn_01x06_Pin
+5V
Enc-B
Enc-A
NRST
BOOT
R11
10K
R10
10K
R9
10K
GND
J2
Conn_01x10_Pin
+3V3
SWDIO
SWCLK
PA15
PC10
PC11
USART2_TX
USART2_RX
PB5
C29
100nF/50V
CAN_TX
USART2_RX
USART2_TX
PC11
PC10
PA15
SWCLK
Y1
8Mhz
R8
220
LO_U
PC14
PC15
NRST
C24
100nF/50V
VBUS_SENS
BATT
+3V3
D11
R43
169K
R44
18K
C28
100nF/50V
Schunt_U_POS
Schunt_U_NEG
PA2
PA4
STM32G431_UFQFPN48
U1
VBAT
PC13
PC14-OSC32_IN
PC15-OSC32_OUT
PF0/OSC-IN
PF1/OSC-OUT
PG10-NRST
PA0
PA1
PA2
PA3
PA4
PA13
VDD
PA12
PA11
PA10
PA9
PA8
PC6
PB15
PB14
PB13
PB12
SWDIO
LO_V
CAN_RX
HI_W
HI_V
HI_U
PC6_LED
LO_W
PB14
PB13
PB12
Schunt_V_NEG
Schunt_V_POS
Schunt_W_POS
Schunt_W_NEG
FB2
600Ω@100MHz
C30
1µF/50V
C31
10nF/50V
C32
100nF/50V
C34
4.7uF/25V
C35
10nF/50V
TH2
10K@25C
Not used
"PB14"
R12
4K7
C33
10nF/50V
+3V3
GND
+3V3
100nF/50V
C23
U8
CAN_TX
CAN_RX
TXD
GND
VCC
RXD
S
CANH
CANL
Vref
R42
120
CAN_H
CAN_L
J3
Conn_01x02_Pin
GND
SN65HVD232DR
SN65HVD232D (Marked as VP232)
Top View
D
GND
VCC
R
NC
CANH
CANL
NC
Sheet: /
File: Emanresu G431.kicad_sch
Title:
Size: A4
Date:
Rev:
KiCad E.D.A. 9.0.1
Id: 1/6

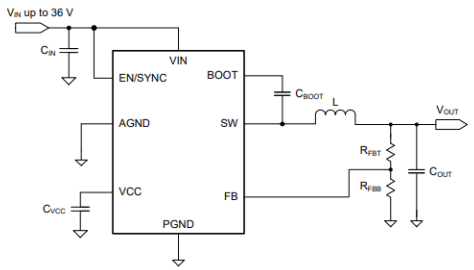

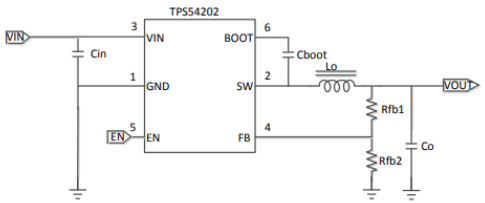

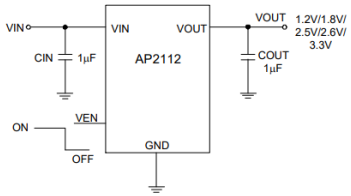

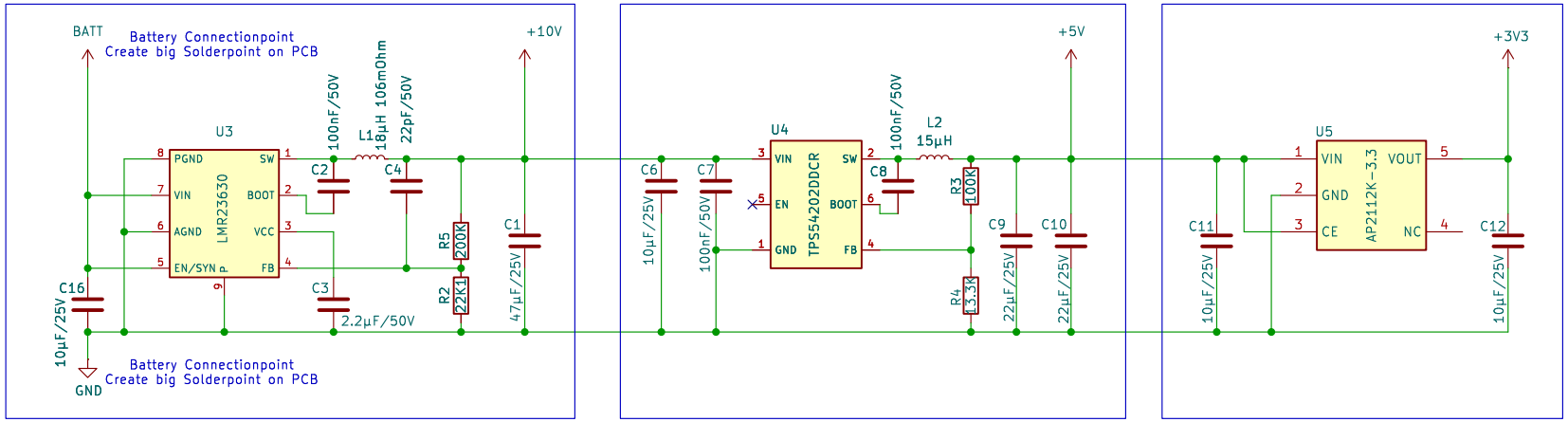

Sheet: /Power/
File: 01_Power.kicad_sch

Title:

Size: A4	Date:	Rev:
KiCad E.D.A. 9.0.1		Id: 2/6

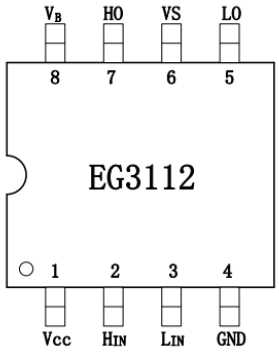

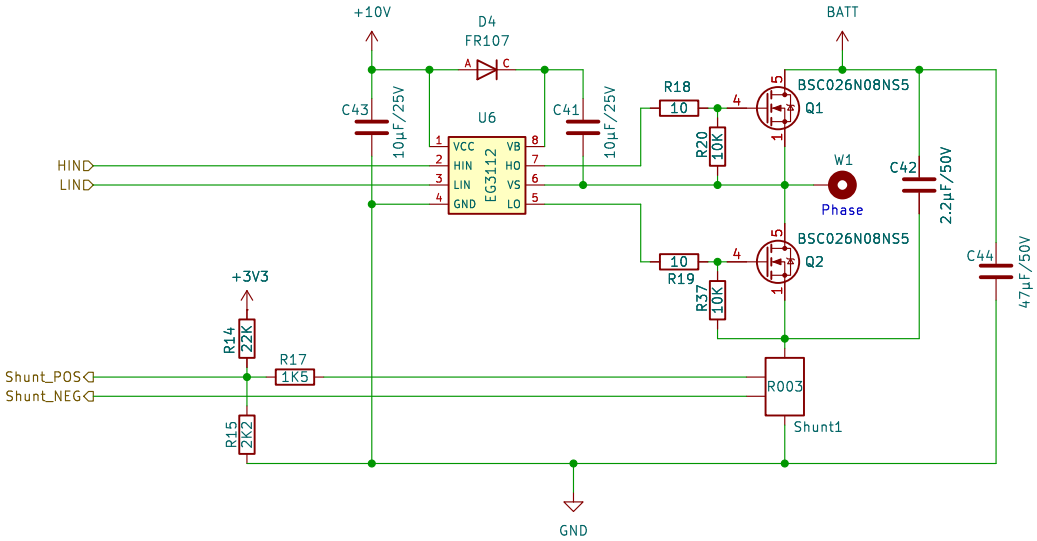

MOSFET

OptiMOS™5 Power-Transistor, 80 V

Features

- Optimized for Synchronous Rectification in server and desktop
- 100% avalanche tested
- Superior thermal resistance
- N-channel
- Qualified according to JEDEC[1)] for target applications
- Pb-free lead plating; RoHS compliant
- Halogen-free according to IEC61249-2-21

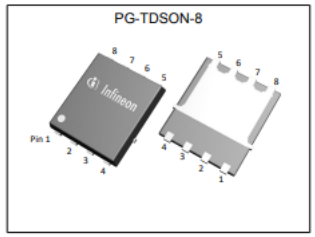

Table 1 Key Performance Parameters

Parameter	Value	Unit
V_{DS}	80	V
$R_{DS(on),max}$	2.6	mΩ
I_D	184	A
Q_{oss}	88	nC
Q_G(0V..10V)	74	nC

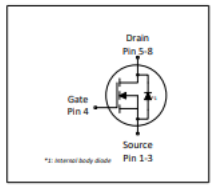

Sheet: /AMP_W/
File: 03_AMP.kicad_sch

Title:

Size: A4	Date:	Rev:
KiCad E.D.A. 9.0.1		Id: 3/6

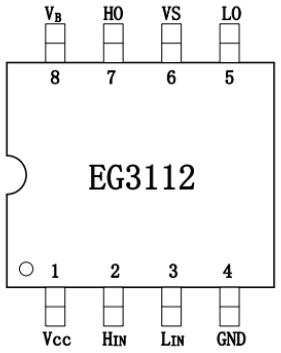

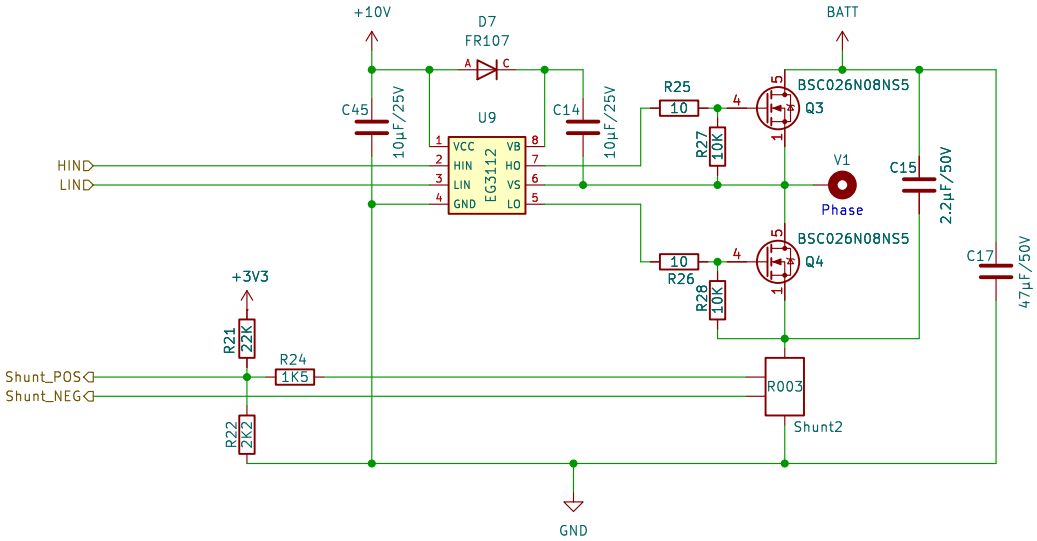

MOSFET

OptiMOS™5 Power-Transistor, 80 V

Features

- Optimized for Synchronous Rectification in server and desktop
- 100% avalanche tested
- Superior thermal resistance
- N-channel
- Qualified according to JEDEC[1)] for target applications
- Pb-free lead plating; RoHS compliant
- Halogen-free according to IEC61249-2-21

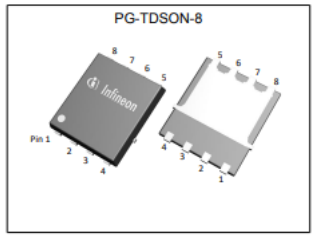

Table 1 Key Performance Parameters

Parameter	Value	Unit
V_{DS}	80	V
$R_{DS(on),max}$	2.6	mΩ
I_D	184	A
Q_{oss}	88	nC
$Q_G(0V..10V)$	74	nC

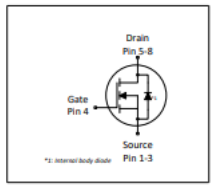

Sheet: /AMP_V/
File: 03_AMP.kicad_sch

Title:

Size: A4	Date:	Rev:
KiCad E.D.A. 9.0.1		Id: 4/6

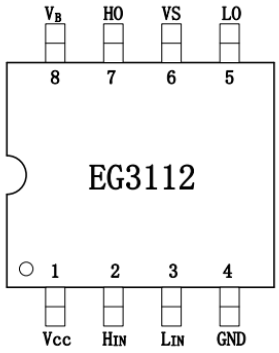

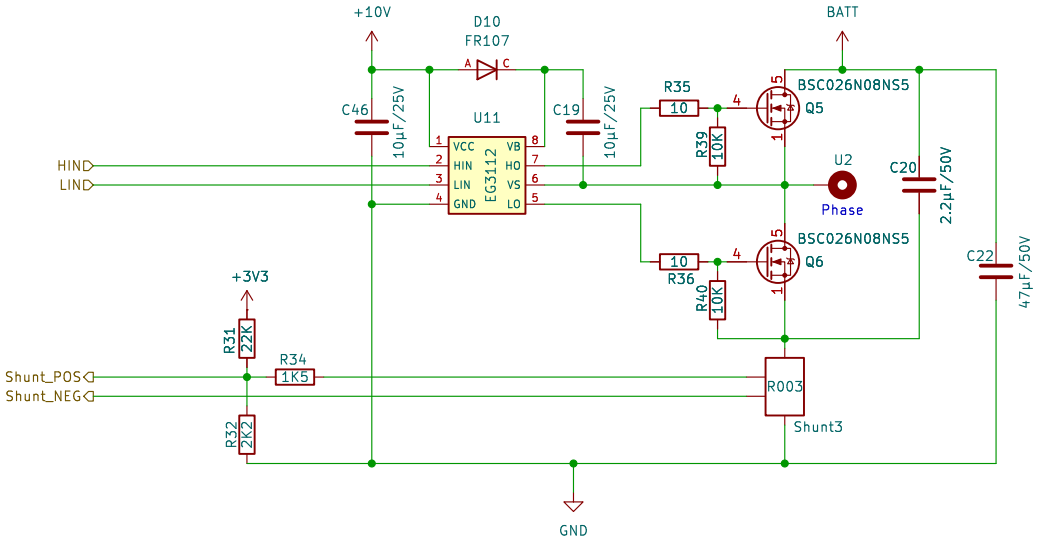

MOSFET

OptiMOS™5 Power-Transistor, 80 V

Features

- Optimized for Synchronous Rectification in server and desktop
- 100% avalanche tested
- Superior thermal resistance
- N-channel
- Qualified according to JEDEC[1)] for target applications
- Pb-free lead plating; RoHS compliant
- Halogen-free according to IEC61249-2-21

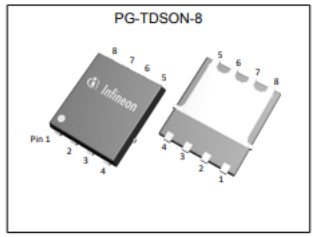

Table 1 Key Performance Parameters

Parameter	Value	Unit
V_{DS}	80	V
$R_{DS(on),max}$	2.6	mΩ
I_D	184	A
Q_{oss}	88	nC
$Q_G(0V..10V)$	74	nC

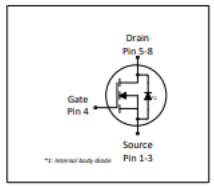

Sheet: /AMP_U/
File: 03_AMP.kicad_sch

Title:

Size: A4	Date:	Rev:
KiCad E.D.A. 9.0.1		Id: 5/6

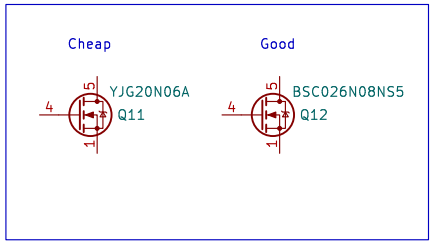

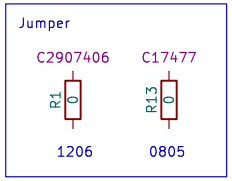

Sheet: /Toolbox/
File: Toolbox.kicad_sch

Title:

Size: A4	Date:	**Rev:**
KiCad E.D.A. 9.0.1		Id: 6/6